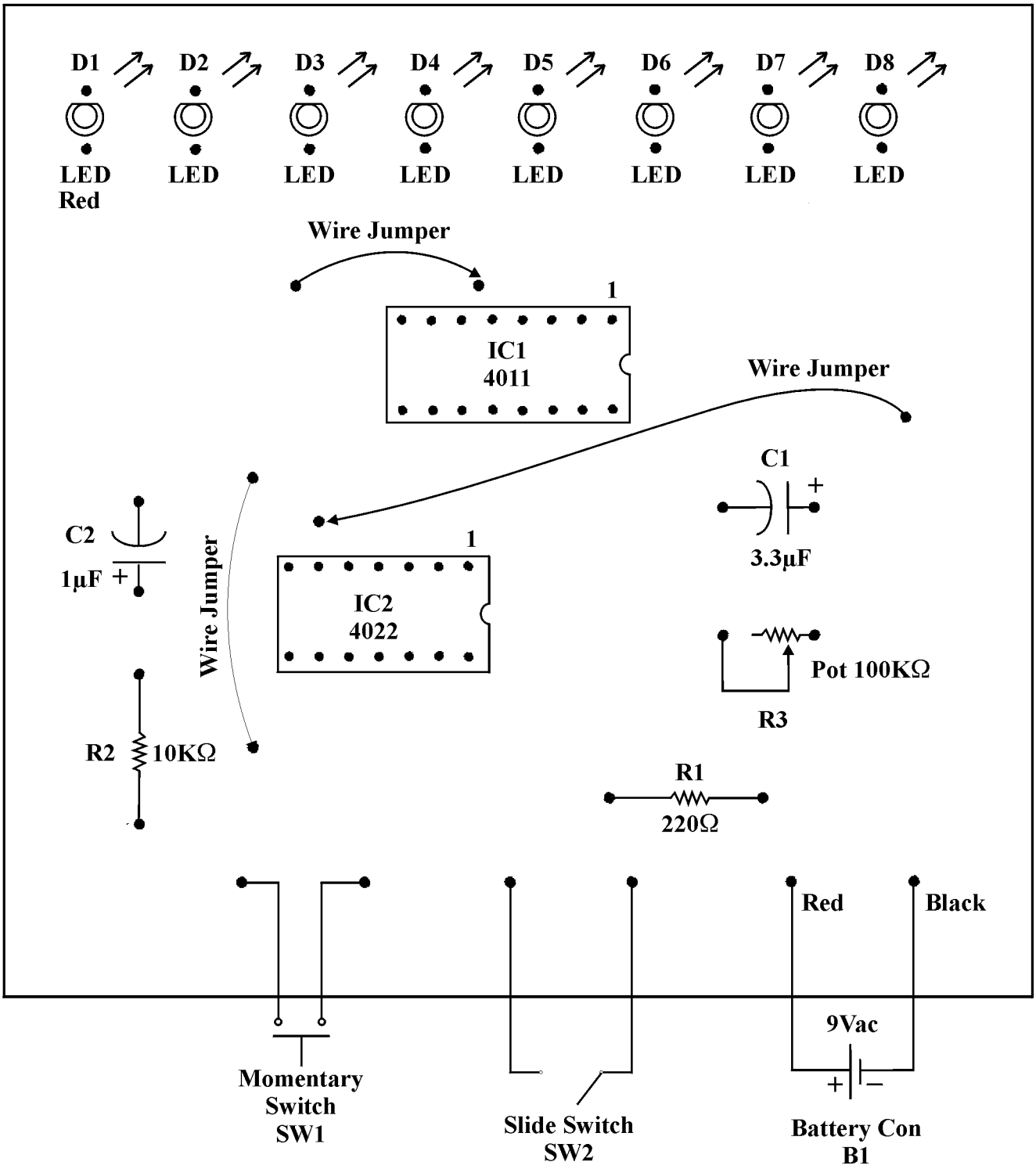Assembly Drawing For "Pot Shot" Kit #817